Projet : Test de réactivité/ réflexes/ lumière

Endpoint :

- Actionneur : Nunchuck
- Afficheur : LED 8x8

Serveur :

- Actionneur : CLI
- Afficheur : CLI

Définition du minimum livrable :

Minimum livrable	Nice to have
Jeu (2 joueurs minimum)	Confirmation Led, Message

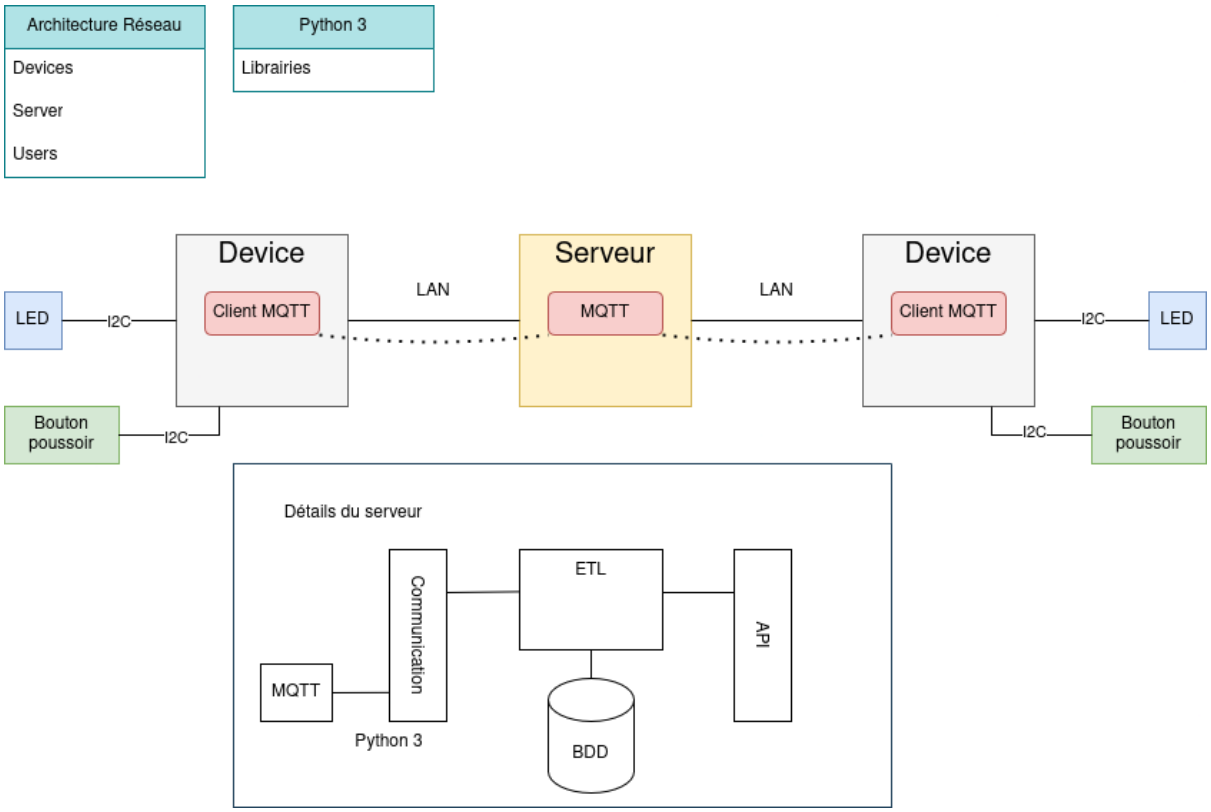

Configuration Switch:

```
conf t

hostname SW-821

enable secret password
username admin secret password

ip domain-name local

! Activer SSH
crypto key generate rsa
1024
ip ssh version 2

! VLAN
vlan 10
name ADMIN
vlan 20
name LAN
vlan 42
name MGMT

! --- PORT ADMIN ---
interface GigabitEthernet1/0/1
description PC_ADMIN
switchport mode access
switchport access vlan 10
spanning-tree portfast

! --- PORT LAN RASPBERRY ---
interface range GigabitEthernet1/0/10 - 20
description RASPBERRY_LAN
switchport mode access
switchport access vlan 20
spanning-tree portfast

! --- PORT VLAN 20 supplémentaire ---
interface GigabitEthernet1/0/2
description RASPBERRY_SRV
switchport mode access
switchport access vlan 20
spanning-tree portfast

! --- PORTS INUTILISÉS (sécurité) ---
interface range GigabitEthernet1/0/3 - 9 , GigabitEthernet1/0/21 - 24
shutdown

interface Vlan10
ip address 192.168.42.1 255.255.255.0
no shutdown

interface Vlan20
no ip address
shutdown

interface Vlan1
shutdown
exit

ip default-gateway 192.168.42.254

line vty 0 4
login local
transport input ssh

end
write memory
```

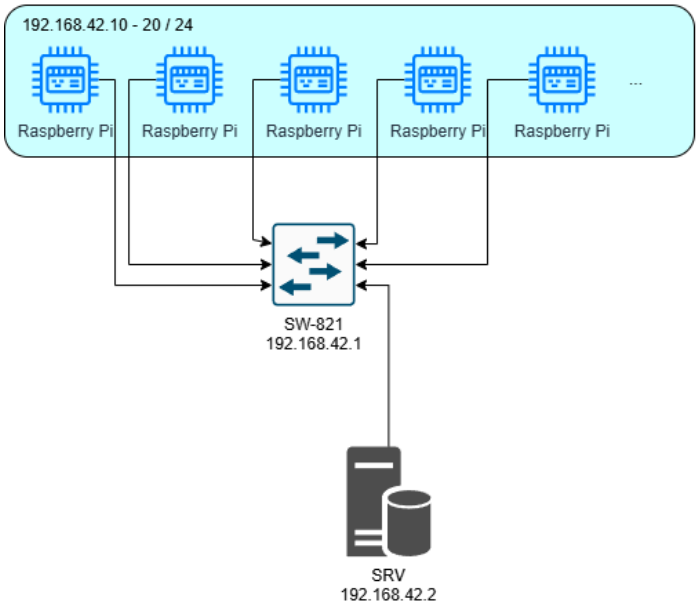

Info Interface SW	
Gi1	Accès Admin
Gi2	SRV
Gi3	
Gi4	
Gi5	
Gi6	
Gi7	
Gi8	
Gi9	
Gi10	Raspberry Pi
Gi11	Raspberry Pi
Gi12	Raspberry Pi
Gi13	Raspberry Pi
Gi14	Raspberry Pi
Gi15	Raspberry Pi
Gi16	Raspberry Pi
Gi17	Raspberry Pi
Gi18	Raspberry Pi
Gi19	Raspberry Pi
Gi20	Raspberry Pi

Plage d'adresse : 192.168.42.0/24

sh run

```
Building configuration...

Current configuration : 3453 bytes
!
! Last configuration change at 07:36:45 UTC Wed Apr 1 2026
!
version 15.2
no service pad
service timestamps debug datetime msec
service timestamps log datetime msec
no service password-encryption
!
hostname SW-821
!
boot-start-marker
boot-end-marker
!
```

```
enable secret 9 $9$Pzw2Y63eEPM283$MS1i7pj7k2mOqvuD4kchVER/sIMgeo75FF0LujSrnfk
!
username admin secret 9 $9$Efr4wyFZSxGVFr$Rsr7d7Qn3ZcYPpcA2FTu5biJTFk.N/XRBgZb7oQk1tM
no aaa new-model
switch 1 provision c1000-24t-4g-l
system mtu routing 1500
!
!
ip domain-name local
!
!
!
!
!
spanning-tree mode rapid-pvst
spanning-tree extend system-id
!
vlan internal allocation policy ascending
!
!
!
!
!
interface GigabitEthernet1/0/1
description PC_ADMIN
switchport access vlan 10
switchport mode access
spanning-tree portfast edge
!
interface GigabitEthernet1/0/2
description RASPBERRY_SRV
switchport access vlan 20
switchport mode access
spanning-tree portfast edge
!
interface GigabitEthernet1/0/3
shutdown
!
interface GigabitEthernet1/0/4
shutdown
!
interface GigabitEthernet1/0/5
shutdown
!
interface GigabitEthernet1/0/6
shutdown
!
interface GigabitEthernet1/0/7
shutdown
!
interface GigabitEthernet1/0/8
shutdown
!
interface GigabitEthernet1/0/9
shutdown
!
interface GigabitEthernet1/0/10
description RASPBERRY_LAN
switchport access vlan 20
switchport mode access
spanning-tree portfast edge
!
interface GigabitEthernet1/0/11
description RASPBERRY_LAN
switchport access vlan 20
switchport mode access
```

```
spanning-tree portfast edge
!
interface GigabitEthernet1/0/12
description RASPBERRY_LAN
switchport access vlan 20
switchport mode access
spanning-tree portfast edge
!
interface GigabitEthernet1/0/13
description RASPBERRY_LAN
switchport access vlan 20
switchport mode access
spanning-tree portfast edge
!
interface GigabitEthernet1/0/14
description RASPBERRY_LAN
switchport access vlan 20
switchport mode access
spanning-tree portfast edge
!
interface GigabitEthernet1/0/15
description RASPBERRY_LAN
switchport access vlan 20
switchport mode access
spanning-tree portfast edge
!
interface GigabitEthernet1/0/16
description RASPBERRY_LAN
switchport access vlan 20
switchport mode access
spanning-tree portfast edge
!
interface GigabitEthernet1/0/17
description RASPBERRY_LAN
switchport access vlan 20
switchport mode access
spanning-tree portfast edge
!
interface GigabitEthernet1/0/18
description RASPBERRY_LAN
switchport access vlan 20
switchport mode access
spanning-tree portfast edge
!
interface GigabitEthernet1/0/19
description RASPBERRY_LAN
switchport access vlan 20
switchport mode access
spanning-tree portfast edge
!
interface GigabitEthernet1/0/20
description RASPBERRY_LAN
switchport access vlan 20
switchport mode access
spanning-tree portfast edge
!
interface GigabitEthernet1/0/21
shutdown
!
interface GigabitEthernet1/0/22
shutdown
!
interface GigabitEthernet1/0/23
shutdown
!
interface GigabitEthernet1/0/24
```

```
shutdown
!
interface GigabitEthernet1/0/25
!
interface GigabitEthernet1/0/26
!
interface GigabitEthernet1/0/27
!
interface GigabitEthernet1/0/28
!
interface Vlan1
no ip address
shutdown
!
interface Vlan10
ip address 192.168.42.1 255.255.255.0
!
interface Vlan20
no ip address
shutdown
!
ip default-gateway 192.168.42.254
ip http server
ip http secure-server
ip ssh version 2
!
!
!
!
line con 0
line vty 0 4
login local
transport input ssh
line vty 5 15
login
transport input none
!
end
```

Architecture MQTT :

	Serveur	Client
Abonné à	`Jeu/+/Temps`	`Jeu/Start` `Jeu/Gagnant`
Publie sur	`Jeu/Start` `Jeu/Gagnant`	`Jeu/<ID>/Temps`

Étapes de jeu - Dialogue MQTT :

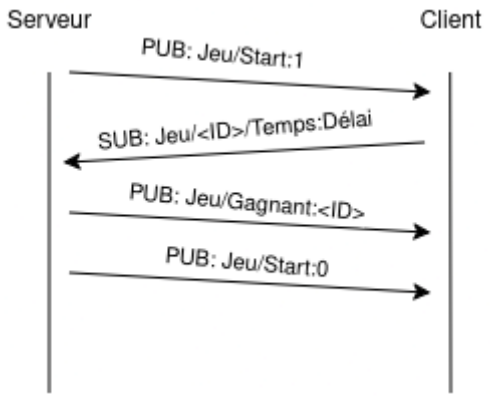

Format des données :

- Jeu/Start : 0 ou 1
- Jeu/Gagnant : Un entier
- Jeu/<ID>/Temps : Flottant (temps en millisecondes)

Lien du GitHub :

- https://github.com/gabriel-etu/ETRS821
- https://github.com/ahmetiejub/Projet_IOT

Ressources Python MQTT :

- https://munier.perso.univ-pau.fr/tutorial/iot/2022/20220510-mqtt_python/
- https://www.emqx.com/en/blog/how-to-use-mqtt-in-python
- https://www.tutos.eu/4910